FACE SLIDER TRACK MOUNTING INSTRUCTIONS

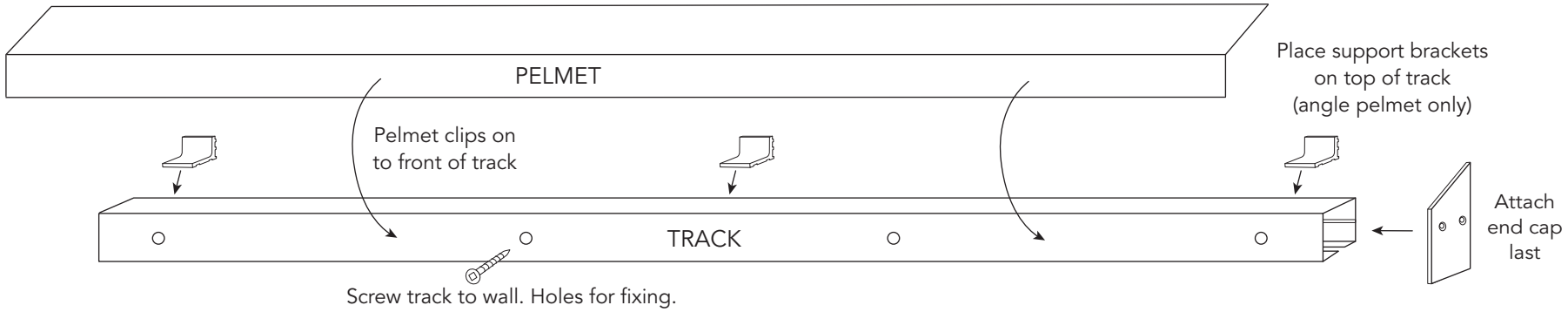

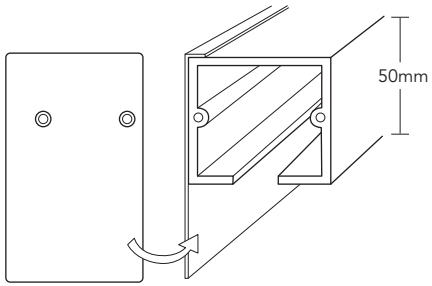

FLAT PELMET

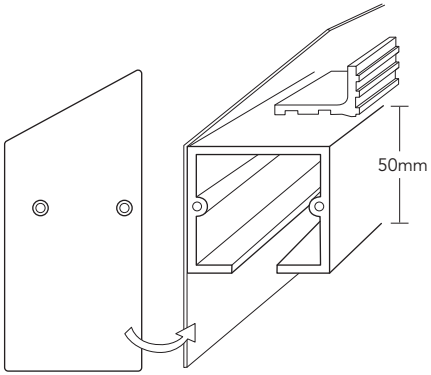

ANGLED PELMET

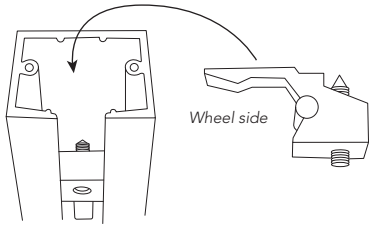

TRACK STOP

Insert track stops into head track after inserting wheel carriage (with arm towards wheels). Adjust position and tighten.

FLOOR TO UNDERSIDE OF TRACK

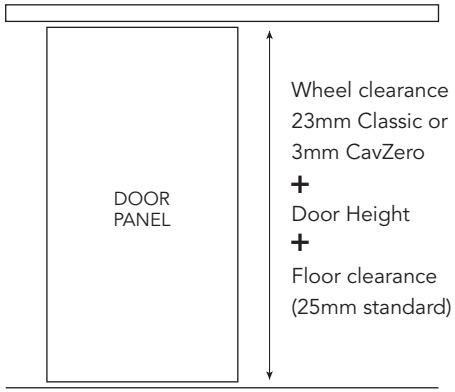

Ph: 03 313 4754 | 0800 846 237 | Email: info@hallmarkgroup.co.nz | www.hallmarkgroup.co.nz